Few-Body Experimental Projects at TUNL

Diane Markoff

Project 2

Cross Section Measurement of $^{2}H(n,np)n$ at 19 MeV and 16 MeV in Symmetric Constant Relative Energy Configurations

Supported by US DoE grants:

UNC DE-FG02-97ER41042

NCCU DE-FG02-05ER41380

Computational support: CREST at NCCU

Motivation: The Space Star Anomaly

- Three-nucleon (3N) model of nucleon-nucleon interactions incomplete
- Discrepancies between data and theoretical predictions
- New experiment uses different measurement configuration to alter dependence on systematic effects (thick deuterated target foil, measure np coincidence)

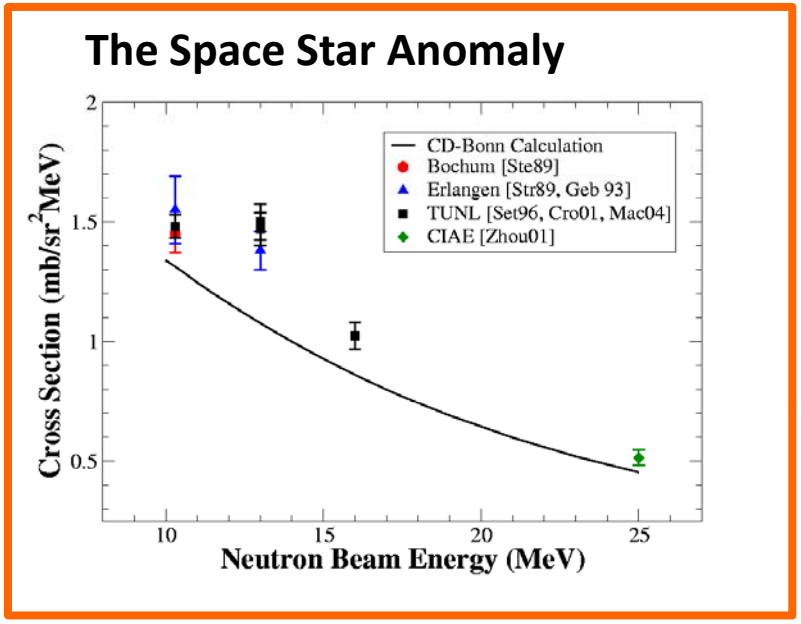

"Space-star Anomaly" in n-d breakup (emitted particles in plane perpendicular to incoming n beam axis)
Also measure coplanar star configuration

Experimental Setup

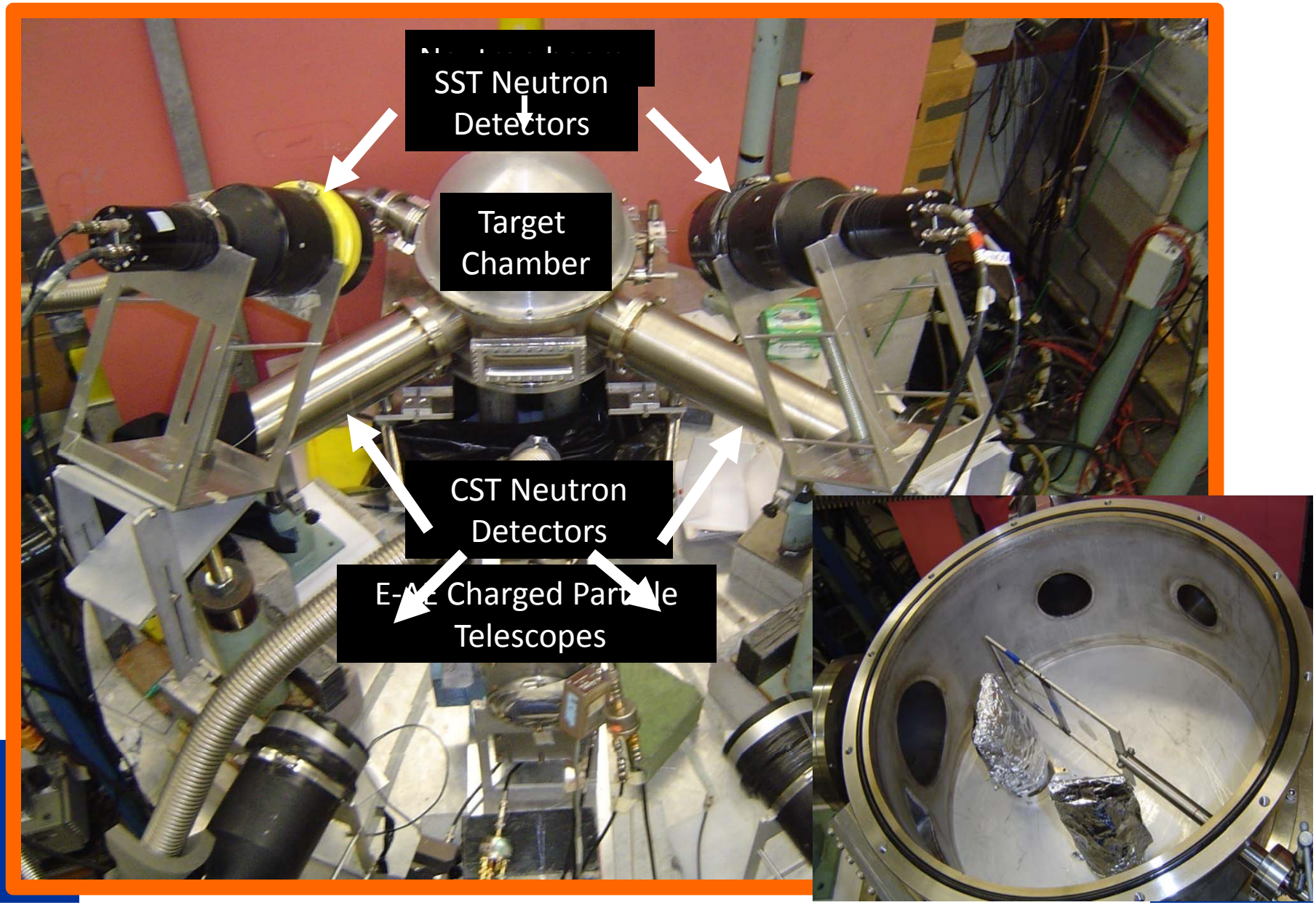

Data Analysis and Monte Carlo Simulation

Data Analysis – particle identification,
Time of flight analysis for energy,
detector efficiencies,
accidentals subtraction,
cross section calculation

Monte Carlo Simulation - To compare experiment with theory, one smears point geometry theoretical cross sections to account for finite beam, target, and detector geometry, as well as proton energy straggling in the target.

Research Scientist – Dr. S. Tajima

Results

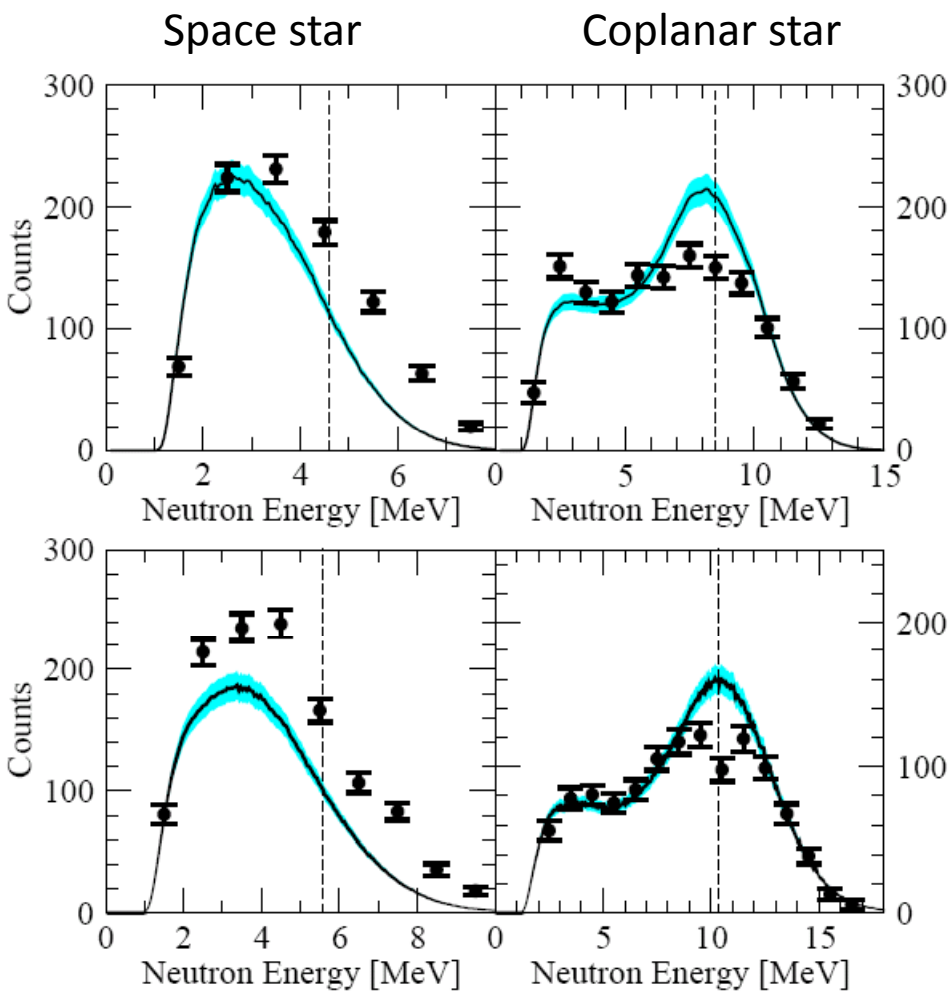

16 MeV

19 MeV

Theoretical solid line – CD Bonn Potential
Error bars – statistical uncertainty; Blue band – systematic uncertainty
Dashed vertical line – position of the star condition

History of Space Star Cross Section Measurements

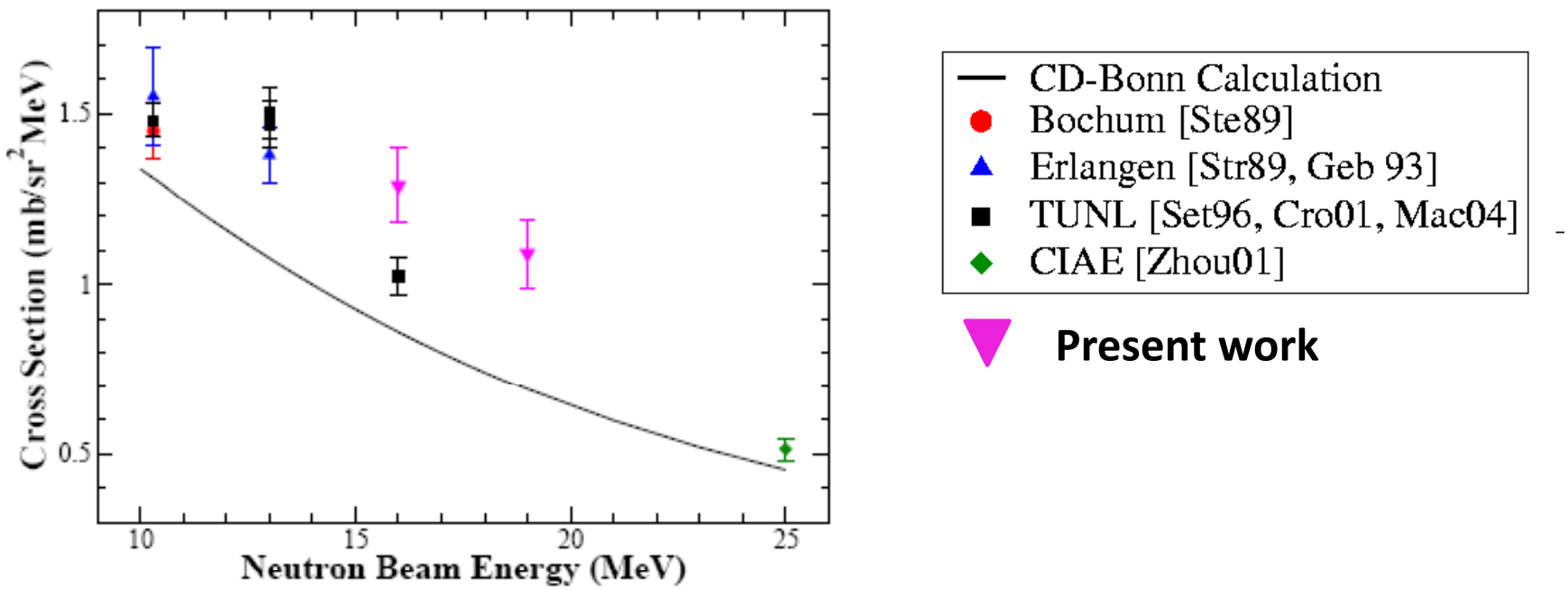

The space-star anomaly in low energy *nd* breakup has been confirmed using a different experimental technique than previous measurements.

The NDBU Collaboration at TUNL

Alex Couture and Tom Clegg

UNC-Chapel Hill

Calvin Howell, Shigeyuki Tajima, Brent Fallin, James Esterline, and Alex Crowell

Duke

Ben Crowe, Diane Markoff, Larry Cumberbatch, and Shigeyuki Tajima

NCCU

Ron Pedroni

NC A&T

Henryk Witała

Jagiellonian University

Photoneutron Asymmetries - ^{9}Be

Data Analysis
Project 2

^{9}Be – Photoneutron Experiment

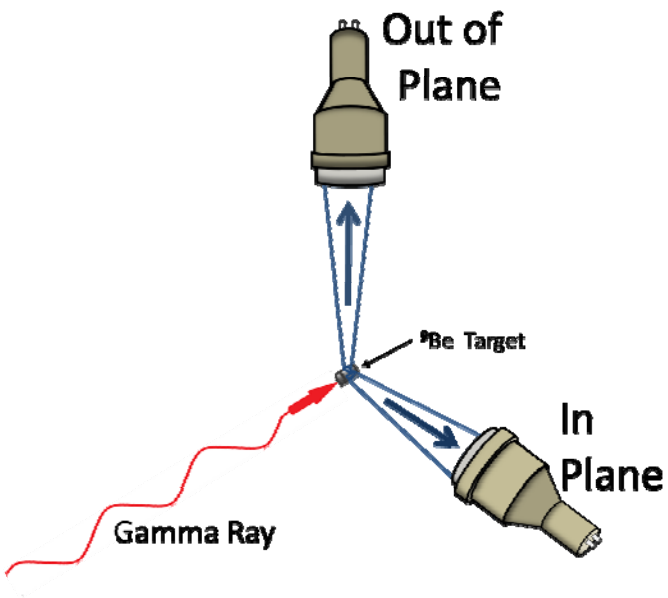

Polarized γ-rays from the Duke Univ. HIγS Facility

Measure ratio:

$$R_n = \frac{\sum parallel\ yeild}{\sum perpendicular\ yeild}$$

18 Scintillator Detectors

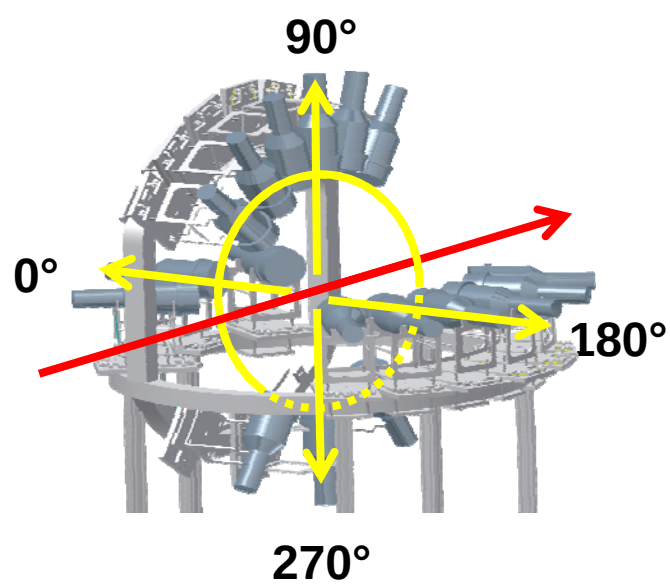

^{9}Be – Experiment Results

Graduate Student – B. Davis

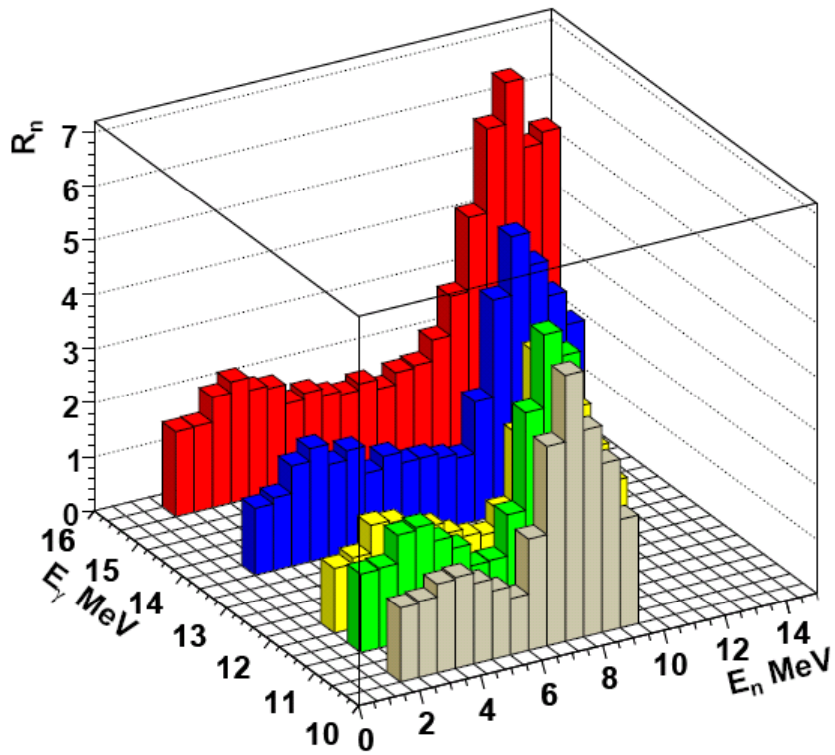

$$R_n = \frac{\sum parallel\ yeild}{\sum perpendicular\ yeild}$$

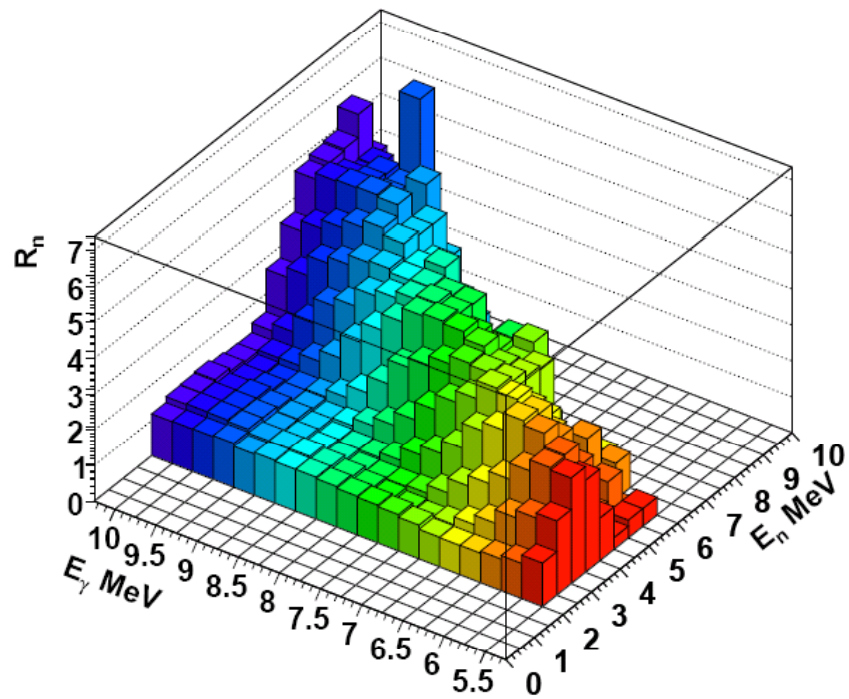

Relatively large ratios

can be used to identify beryllium

indicate interesting nuclear structure

Angular dependence of asymmetries being studied

Collaborators

B. Davis, M.W. Ahmed, D. Markoff
NCCU and TUNL

H.J. Karwowski, J.R. Tompkins
UNC Chapel Hill and TUNL

J.M. Mueller, L. Myers , S. Stave, C. Smith, H.R. Weller
Duke University and TUNL

TIMELINE: B. Davis Graduates May 2012
paper submitted for publication spring 2012

Additional experiments on U, Th, Pu isotopes

nn and np Quasi-Free Scattering Cross Section via the nd Breakup Reaction at 19 MeV

Experimental Design

Project 2

Motivation

Neutron-deuteron breakup reaction – reaction used to study theoretical nucleon-nucleon potential models and 3-nucleon force contributions

Neutron-neutron quasi-free scattering (*nn*-QFS)
discrepancy between data and rigorous 3N calculations

Neutron-proton quasi-free scattering (*np*-QFS)
data in good agreement with calculations

-Two previous measurements for *nn*-QFS:
E_n = 26 MeV; ^{2}H(d, n) and E_n = 25 MeV; ^{3}H(d, n)

-Independent verification of discrepancy in new experimental configuration

Proposed Experiment

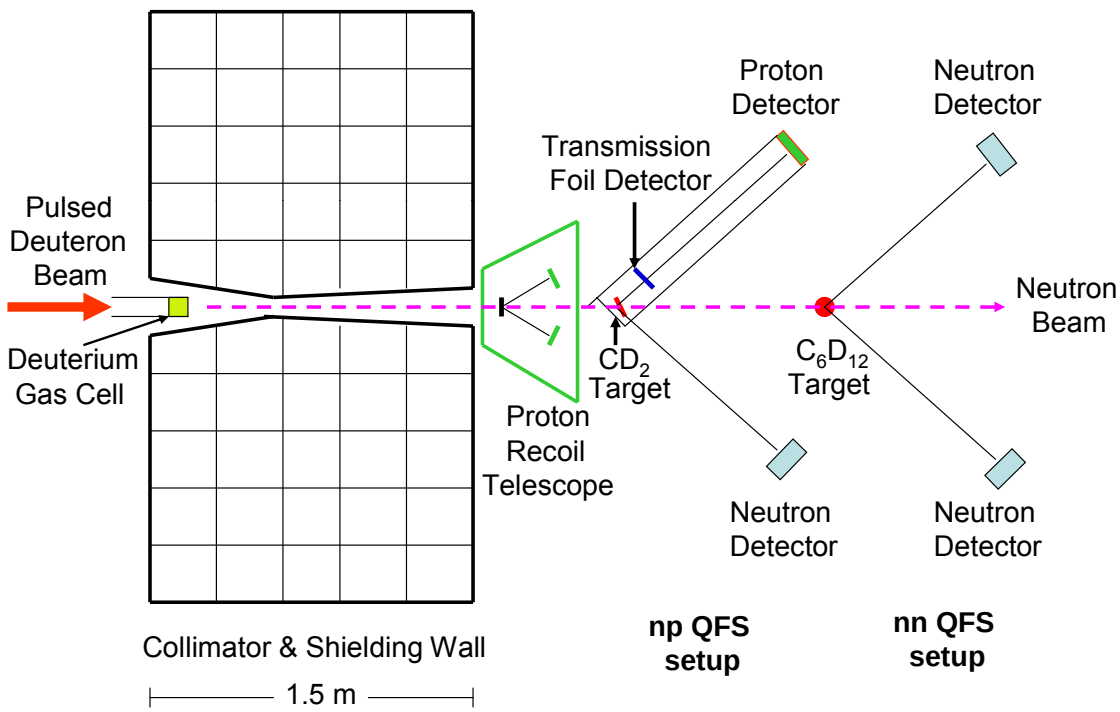

Measure nn and np QFS cross sections at the same time.

E_n= 19 MeV $^2H(d, n)$

Use apparatus from star measurements for the np QFS setup.

10 weeks of beam time → measure cross sections to a statistical uncertainty of 1 to 1.5%
Goal to achieve overall uncertainty of 2.5% and 4 % for the *nn* and *np* QFS cross sections

Apparatus Design

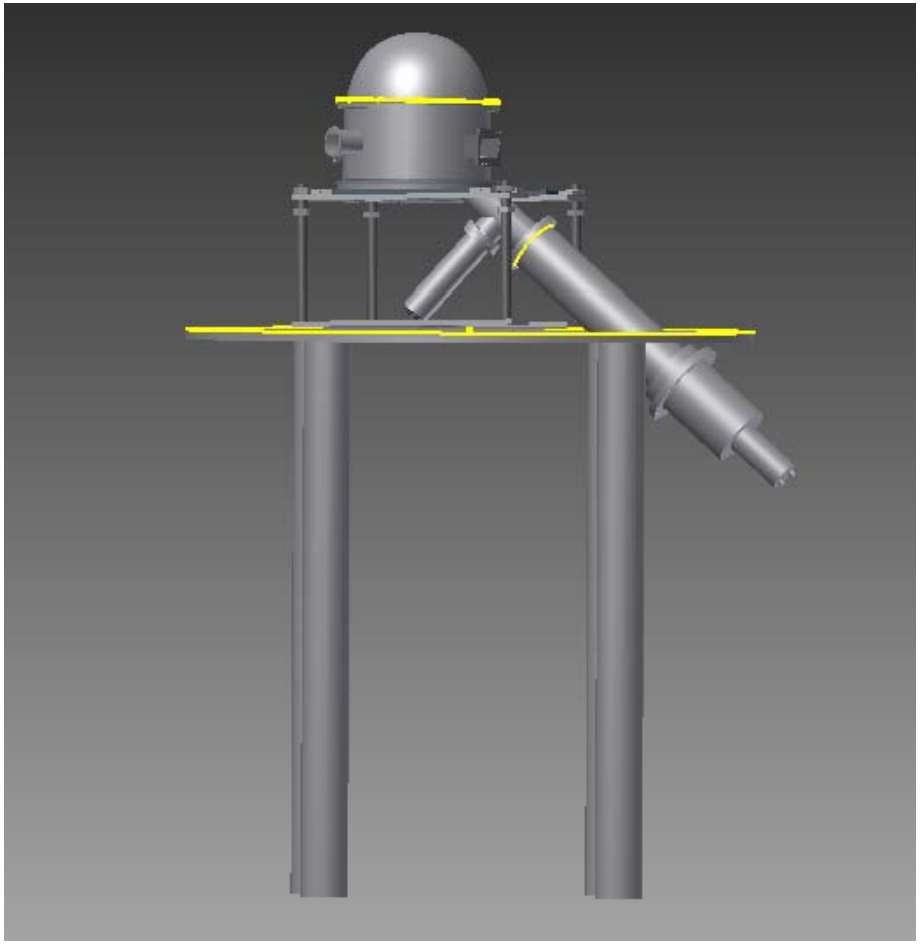

Modifications to old target chamber and detector holders
In progress.

Kossi Agbeve – MS Student

Collaborators

Calvin Howell –Duke University and TUNL
Thomas Clegg – UNC Chapel Hill and TUNL
Werner Tornow - Duke University and TUNL
Ben Crowe - NCCU
Diane Markoff – NCCU
Kossi Agbeve – NCCU MS student

Starting Spring 2012 NCCU Undergraduates
Brogan Thomas
Haley Harrison
Edward Long

Few-Body Experimental Projects at TUNL
Project 2

nd breakup – space star and coplanar star cross section measurements – 16 and 19 MeV

(completed)

Beryllium-9 (γ,n) asymmetry measurements

(analysis in final stages)

nn and np QFS cross section measurements in nd breakup at 19 MeV

(project in design phase)